HMT MARINE ENGINE

Seoul
Rm302 Green B/D, 40 Olympic-ro 10-gil, Songpa-gu, Seoul, Korea
TEL: +82-2-420-3347/8 **FAX:** +82-2-420-3349
Mob: +82-10-3424-3349 **E-mail:** info@hmtmarine.co.kr

Factory
47,Obang-ro 199-gil, Micheon-myeon, Jinju-si, Gyeongsangnam-do, Korea
TEL: +82-55-747-1238 **FAX:** +82-55-746-1236
www.hmtmarine.co.kr

Distributor / Agent

ISO 9001

www.hmtmarine.co.kr

SUCCESS YOURS BUSINESS WITH

HMT
MARINE ENGINE

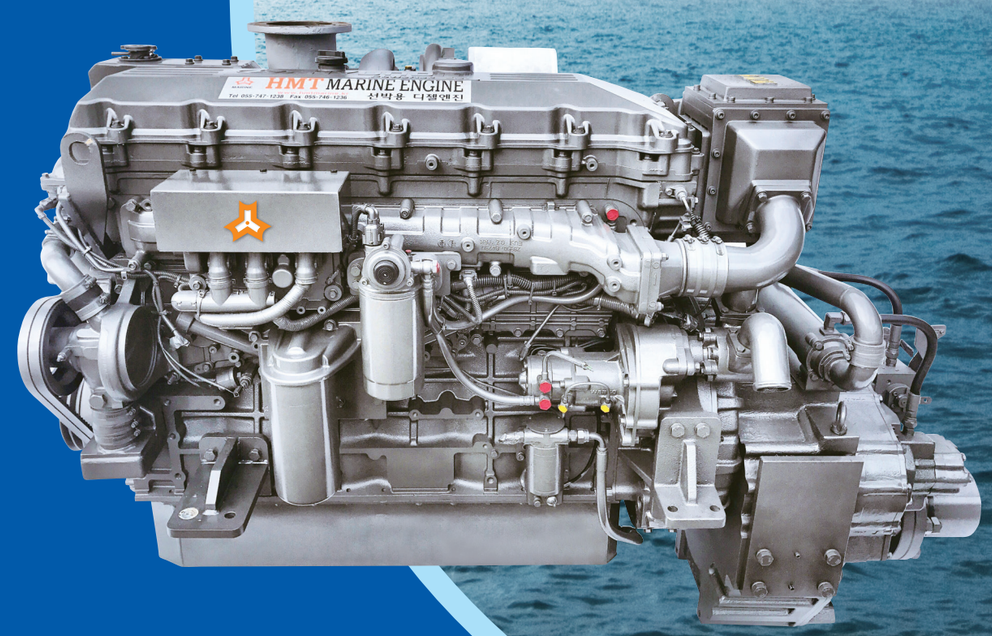

HMT

INTRODUCTION

HMT Marine Engine manufacturers its products based on Hyundai and Doosan industrial engines with the experience and technology that has accumulated in the course of production of marine engines and generator sets since 1982.

HMT Marine Engines have been produced with the basic principle of zero defect and they feature stronger power, lower fuel consumption, high economical efficiency, simple and compact appearance, easy maintenance, less maintenance expenditure, and longer durability.

HMT Marine Engines, made of top quality Korean parts and components, undergo a specified series of strict testing and inspections including dynamometer testing, before they are shipped out.

We, **HMT Marine Engine,** have always done and will do our utmost to provide all the people around the world who are engaged in the field of marine business with our products that are reliable and of high quality.

CONTENTS

04
Marine Diesel Engines based on Hyundai engines
Direct Injection(80PS ~ 400PS)

05
Marine Diesel Engines based on Hyundai engines
Electronic Unit Injector (500PS ~ 600PS)

06
Marine Diesel Engine General View

07
Marine Diesel Engine Dimensions

08
Marine Diesel Gen-sets based on Hyundai engines

10
Marine Diesel Gen-sets based on Doosan engines

HMT MARINE ENGINE

Marine Diesel Engines based on Hyundai engines

Direct Injection (80PS ~ 400PS)

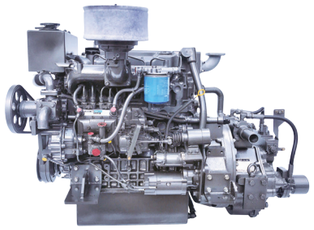

»H4AF
80PS / 2700RRPM

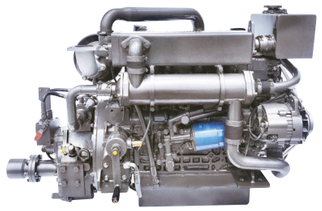

»H4AKT
100PS / 2700RPM

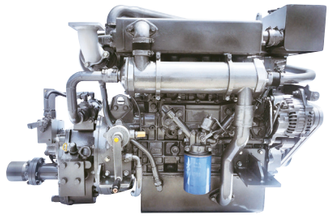

»H4DAT
130PS / 2700RPM

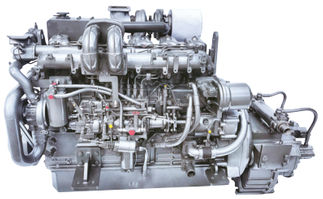

»H6AZT
260PS / 2000RPM

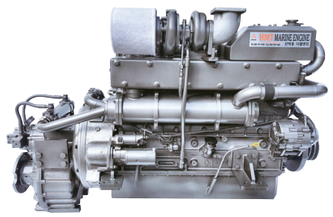

»H6ACT
280PS / 2000RPM

	Configuration	ps/rpm	No.of cylinders	Bore x Stroke	Displacement (L)	Compression ratio	Fuel injection	Aspiration	Fuel	Weight (kg)
H4AF	4 cycle In-line, Water Cooled, Diesel Engine	80/2700	4	104x105	3.6	17.5:1	Direct Injection (Mechanical)	Naturally Aspriated	Diesel	440
H4AKT		100/2700	4	100x105	3.3	16:1		Turbo charged		450
H4DAT		130/2700	4	104x115	3.9	16.5:1				455
H6AZT		260/2000	6	130x140	11.2	16:1				1,280
H6ACT		280/2000	6	130x140	11.2	15.5:1				1,290
H6ACTIP		360/2000	6	130x140	11.2	16.5:1		Turbo charged with Intercooler		1,490
H6ACTIE		400/2100	6	130x140	11.5	16.5:1	LIGHT DUTY			1,495
H6CCTI		500/2000	6	130x155	12.34	17.2:1	Electronic Unit Injector (E.U.I)			1,790
H6CETI		550/2000	6	130x160	12.74	17.2:1				1,790
H6CETIP		600/2000	6	130x160	12.99	17.2:1				1,850

Marine Diesel Engines based on Hyundai engines

Electronic Unit Injector (500PS ~ 600PS)

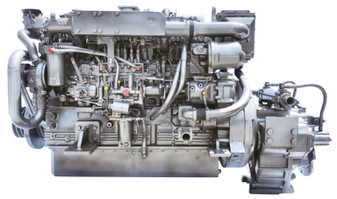

»H6ACTIP
360PS / 2000RPM

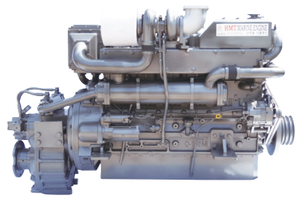

»H6ACTIE
400PS / 2100RPM

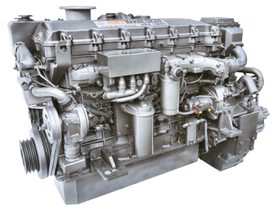

»H6CCTI
500PS / 2000RPM

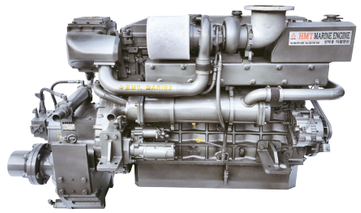

»H6CETI
550PS / 2000RPM

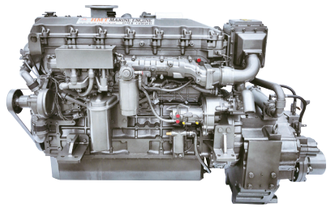

»H6CETIP
600PS / 2000RPM

Marine Diesel Engine General View

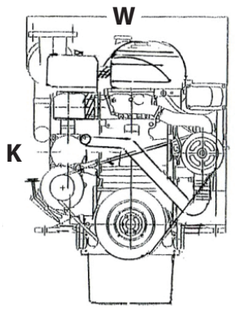

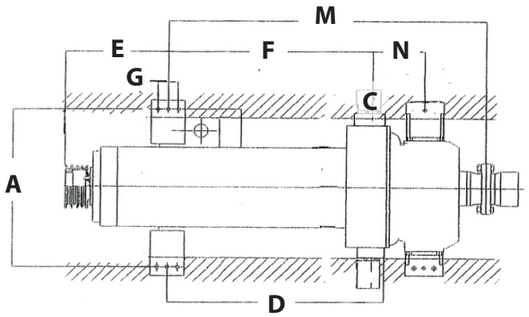

Marine Diesel Engine Dimensions

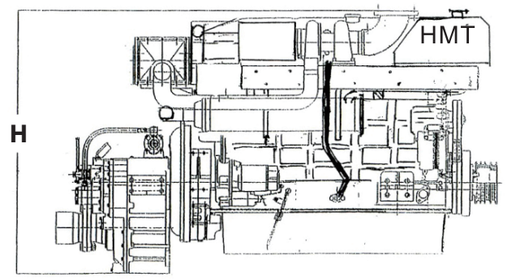

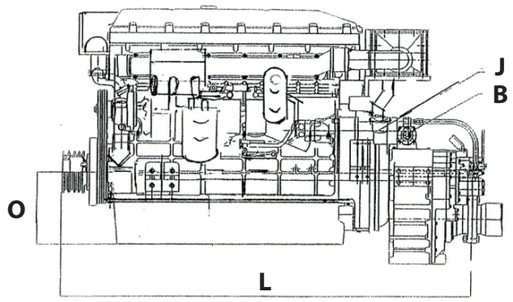

Engine	Gearbox	L	W	H	D	E	F	G	A	J	B	M	N	O	K	C
H4AF	TK190	1,120	650	850	557	285	507	75	600	1"	1"	825	152	260	1"	-
H4AKT	TK190	1,120	650	850	557	285	507	75	600	1"	1"	825	152	260	1"	-
H4DAT	TK250	1,150	650	850	557	285	507	75	600	1"	1"	825	152	260	1"	-
H6AZT	TK330	1,690	800	1,040	919	480	850	80	700	2"	1 1/2"	1,329	239	300	2"	65
H6ACT	TK330	1,690	800	1,040	919	480	850	80	700	2"	1 1/2"	1,329	239	300	2"	65
H6ACTI	TK450	1,740	850	1,060	919	480	850	80	700	2"	1 1/2"	1,340	245	300	2"	65
H6ACTIE	TK450	1,740	850	1,060	919	480	850	80	700	2"	1 1/2"	1,340	245	300	2"	65
H6CCTI	TK600	1,950	850	1,190	972	485	907	80	800	2"	1 1/2"	1,460	280	340	1 1/2"	80
H6CETI	TK620	2,000	850	1,200	972	485	907	80	800	2"	1 1/2"	1,500	295	340	1 1/2"	80
H6CETIP	TK620	2,000	850	1,200	972	485	907	80	800	2"	1 1/2"	1,500	295	340	1 1/2"	80

The contents and dimensions are subject to change based on improvements in the design of our products without notice.

Marine Diesel Gen-sets based on Hyundai engines

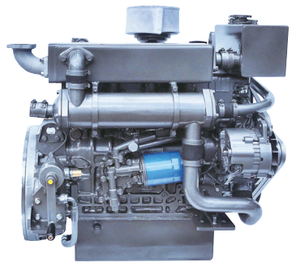

»H4AF-MG
33(26)KW / 1500RPM

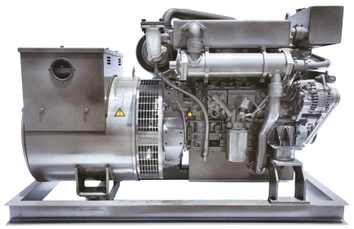

»H4AK-MG
40(32)KW / 1500RPM

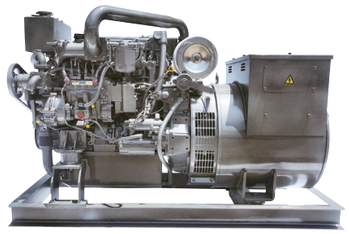

»H4DA-MG
55(44)KW / 1500PM

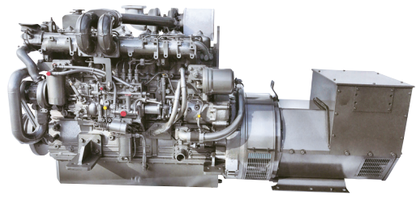

»H6AZ-MG
179(143)KW / 1500RPM

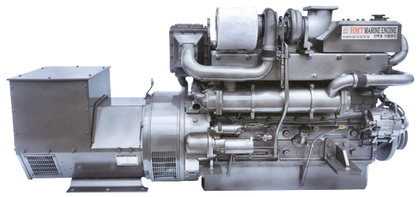

»H6AC-MG
219(175)KW / 1500RPM

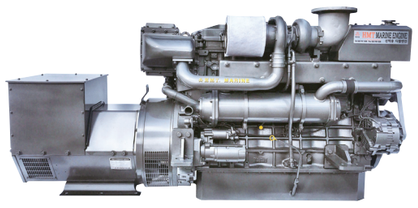

»H6CC-MG
279(223)KW / 1500RPM

MODEL			H4AF-MG		H4AK-MG		H4DA-MG		H6AZ-MG		H6AC-MG		H6CC-MG	
STANDBY POWER (PRIME POWER)		RPM	1500	1800	1500	1800	1500	1800	1500	1800	1500	1800	1500	1800
		PS	45	54	54	74	75	95	243	278	288	315	380	477
		KW	33(26)	40(32)	40(32)	54(43)	55(44)	70(56)	179(143)	204(163)	219(175)	232(185)	279(223)	351(280)
		KVA	41(33)	50(40)	50(40)	67(54)	68(55)	87(70)	223(179)	255(204)	273(219)	290(232)	348(279)	437(351)
ENGINE	NO. OF CYL		4		4		4		6		6		6	
	BORExSTROKE		104 x 105		100 x 105		104 x 115		130 x 140		130 x 140		133 x 155	
	DISPLACEMENT		3,568		3,298		3,907		11,149		11,149		12,344	
	COMPRESSION RATIO		17.5:1		16:1		16.5:1		16.5:1		16.5:1		17.2:1	
	ASPIATION		N.A		TC		TC		TC		TCI		TCI	
	GOVERNOR		BOSCH RSV TYPE (OR ELECTRIC)										E.C.U	
	FLYWHEEL	SAE	#10		#10		#10		#14		#14		#14	
	FLYWHEEL HOUSING	SAE	#4		#4		#4		#1		#1		#1	
	COOLING SYSTEM		HEAT EXCHANGER TYPE FORCED CIRCULATING CENTRIFUGAL PUMP											
	STARTING SYSTEM		DC24 VOLTAGE/ELECTRIC STARTING BY START MOTOR											
Alter-nator	MODEL		HSG-50		HSG-60		HSG-70		HSG-200		HSG-235		SLG-314F	
	PRIME POWER (KW)	60HZ / 50HZ	50HZ	60HZ	50HZ	60HZ	50HZ	60HZ	50HZ	60HZ	50HZ	60HZ	50HZ	60HZ
		KVA	50	62.5	62.5	75	72.5	87.5	200	250	250	294	380	456
		KW	40	50	50	60	58	70	160	200	200	235	304	365
	VOLTAGE/PHASE/POLE		225V AC, 380V AC, 445V AC / 3 phase 4 pole											
	INSULATING CLASS		"H" CLASS											
	EXCITING		SELF EXCITING BRUSHLESS											
	BEARING/VENTILATING		SINGLE BEARING / SELF VENTILATING											
DIMENSION(mm) (Engine + Alternator)		L	1,400		1,450		1,450		2,400		2,400		2,400	
		W	700		700		700		900		900		900	
		H	980		950		950		1,350		1,350		1,400	
WEIGHT(kg)			700		720		770		2,100		2,140		2,350	

Marine Diesel Gen-sets based on Doosan engines

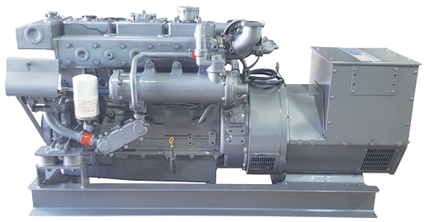

»D136TI-MG
115(92)KW / 1500RPM

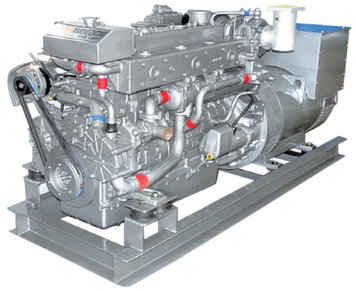

»D086TI-MG
151(120)KW / 1500RPM

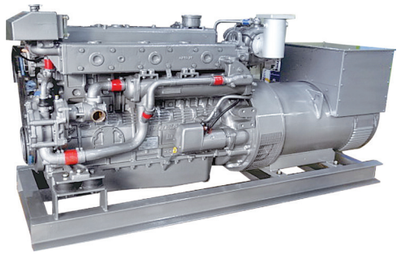

»D196TI-MG
173(138)KW / 1500RPM

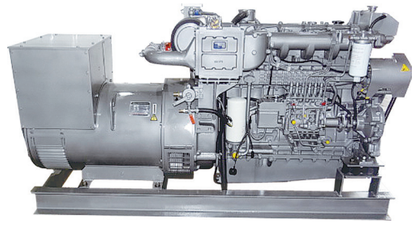

»D126TI-MG
206(164)KW / 1500RPM

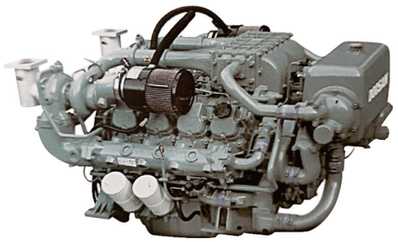

»D158TI-MG
302(241)KW / 1500RPM

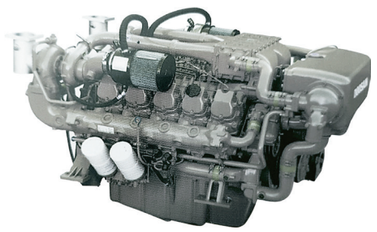

»D180TI-MG
357(285)KW / 1500RPM

MODEL			D136-MG		D136T-MG		D136TI-MG		D086TI-MG		D196TI-MG		D126TI-MG		D158TI-MG		D180TI-MG		D222TI-MG	
STANDBY POWER(PRIME POWER)		RPM	1500	1800	1500	1800	1500	1800	1500	1800	1500	1800	1500	1800	1500	1800	1500	1800	1500	1800
		PS	105	126	145	170	157	188	205	253	235	270	280	336	410	480	485	600	606	720
		KW	77(61)	93(74)	107(85)	125(100)	115(92)	138(110)	151(120)	186(148)	173(138)	199(159)	206(164)	247(197)	302(241)	353(282)	357(285)	441(353)	446(356)	530(424)
		KVA	96(77)	116(93)	133(107)	156(125)	143(115)	172(138)	188(151)	232(186)	216(173)	248(199)	257(206)	308(247)	377(302)	441(353)	446(356)	551(441)	557(446)	662(530)
ENGINE	NO. OF CYL		6		6		6		6		6		6		V8		V10		V12	
	BORExSTROKE	mm	111x139								123x155				128x142					
	DISPLACEMENT	cc	8,071								11,015				14,618		18,273		21,927	
	COMPRESSION RATIO		17.6:1		16.7:1						16.5:1		17:1		15:1					
	ASPIRATION		N.A		TC		TCI				TCI		TCI							
	GOVERNOR		Mechanical all speed (r.s.v)												Mechanical variable speed (R.Q.V)					
	FLYWHEEL HOUSING	SAE	SAE#2 & #11 1/2								SAE#1 & #14									
	COOLING SYSTEM		INDIRECT COOLING BY SEA WATER WITH HEAT EXCHANGER																	
	STARTING SYSTEM		DC24 VOLTAGE / ELECTRIC STARTING BY STARTER MOTOR																	
Alter-nator	MODEL		HSG-115		HSG-150		HSG-150		HSG-200		HSG-200		HSG-250		SLG-314F		SLG-354C		SLG-354E	
	PRIME POWER (KW)	60HZ / 50HZ	50HZ	60HZ	50HZ	60HZ	50HZ	60HZ	50HZ	60HZ	50HZ	60HZ	50HZ	60HZ	50HZ	60HZ	50HZ	60HZ	50HZ	60HZ
		KVA	118	144	160	190	160	190	200	250	200	250	263	313	380	456	450	550	600	712
		KW	94	115	128	150	128	150	160	200	160	200	210	250	304	365	360	440	480	570
	VOLTAGE/PHASE/POLE		225V AC, 380V AC, 445V AC / 3 phase 4 pole																	
	INSULATING CLASS		"H" CLASS																	
	EXCITING		SELF EXCITING BRUSHLESS																	
	BEARING/VENTILATING		SINGLE BEARING / SELF VENTILATING																	
DIMENSION(mm) (Engine)		L	1,182		1,182		1,182		1,182		1,397		1,414		1,657		1,815		1,874	
		W	770		766		825		825		931		933		1,226		1,227		1,243	
		H	725		925		925		962		1,077		1,077		1,397		1,576		1,548	
WEIGHT(kg)			735		748		773		790		1,099		1,060		1,350		1,550		1,750	

GENERATOR ENGINE

D4BB-G1,G2

20kWe, 26kWe Grade for Generator Engine

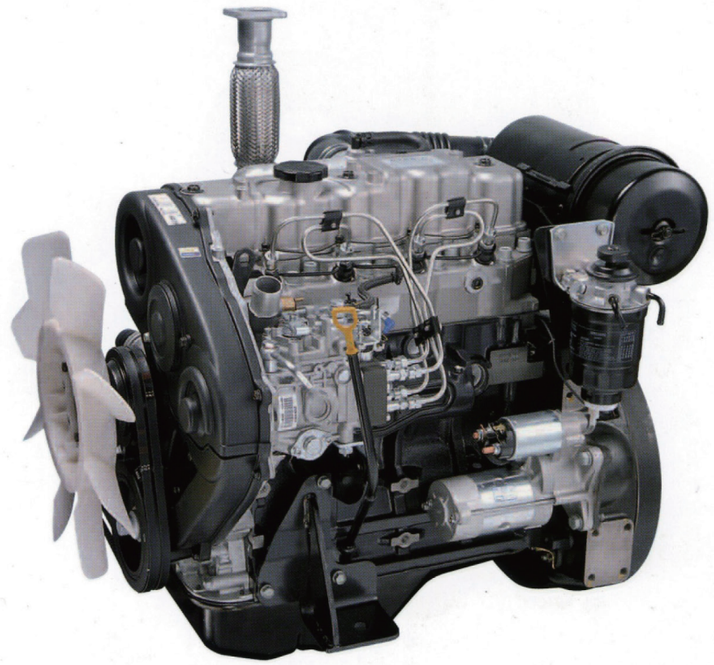

General View of Engine

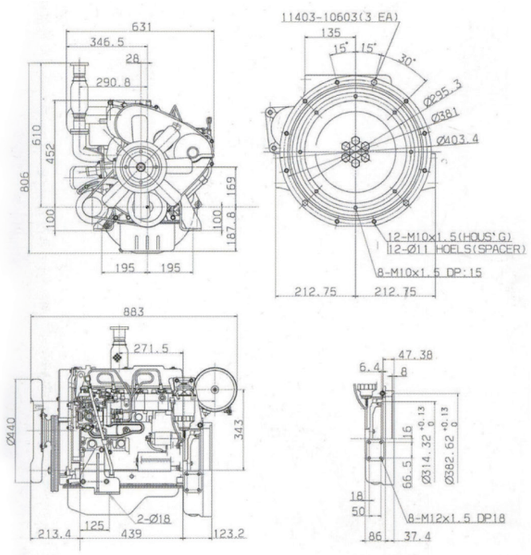

Specifications

Engine model		D4BB-G1 (AG31)	D4BB-G2 (AG39)
Engine type		4 Cycle, water cooled	
Injection type		Indirect injection	
No. of cyl. And configuration		4-in line	
Aspiration		N.A	
Displacement(cc)		2,607	
Bore x stroke(mm)		91.1 x 100	
Compression ratio		22 : 1	
Dry weight(kg)		210	
Dimension	Length(mm)	883	
	Width(mm)	631	
	Height(mm)	806	
rpm		1,800	1,800
Stand-by power	Ps	28	45
	kW	21	33
Prime power	Ps	25	41
	kW	19	30
Governor		-	
Flywheel		SAE #10	
Flywheel housing		SAE #4	
Alternator		12V - 65A	
Starting motor		12V - 2.2kW	

D4AF-G

40kWe Grade for Generator Engine

General View of Engine

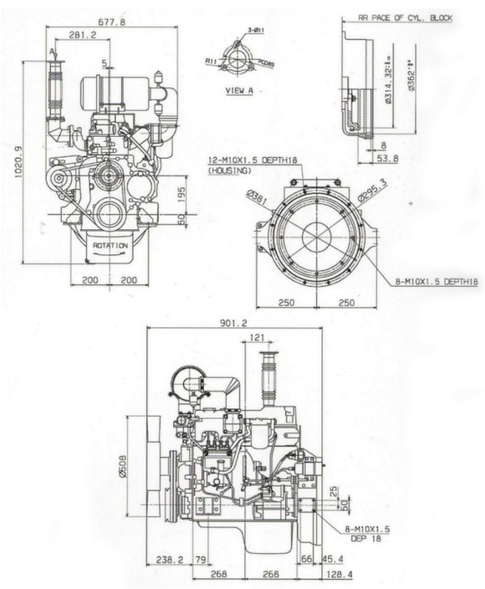

Specifications

Engine model		D4AF-G (EM68)	
Engine type		4 Cycle, water cooled	
Injection type		Direct injection	
No. of cyl. And configuration		4-in line	
Aspiration		N.A	
Displacement(cc)		3,568	
Bore x stroke(mm)		104 x 105	
Compression ratio		17.5 : 1	
Dry weight(kg)		324	
Dimension	Length(mm)	901	
	Width(mm)	678	
	Height(mm)	1,021	
rpm		1,500	1,800
Stand-by power	Ps	50	60
	kW	37	44
Prime power	Ps	45	54
	kW	33	40
Governor		Bosch RSV type	
Flywheel		SAE #10	
Flywheel housing		SAE #4	
Alternator		24V - 50A	
Starting motor		24V - 5.0kW	

D4AK-G

55kWe Grade for Generator Engine

General View of Engine

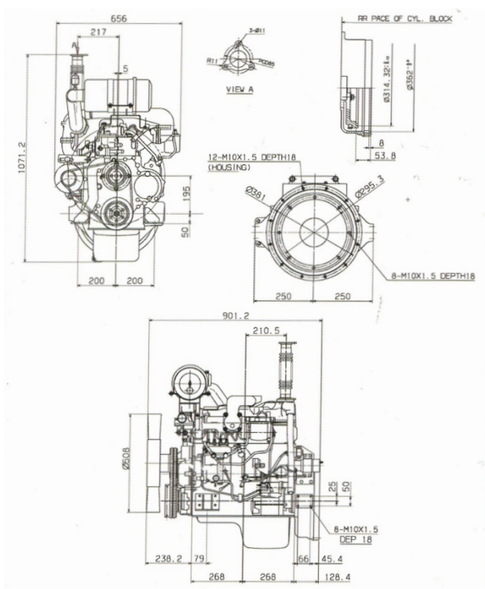

Specifications

Engine model		D4AK-G (EM69)	
Engine type		4 Cycle, water cooled	
Injection type		Direct injection	
No. of cyl. And configuration		4-in line	
Aspiration		T.C	
Displacement(cc)		3,298	
Bore x stroke(mm)		100 x 105	
Compression ratio		16 : 1	
Dry weight(kg)		334	
Dimension	Length(mm)	901	
	Width(mm)	656	
	Height(mm)	1,071	
rpm		1,500	1,800
Stand-by power	Ps	60	82
	kW	44	60
Prime power	Ps	54	74
	kW	40	54
Governor		Bosch RSV type	
Flywheel		SAE #10	
Flywheel housing		SAE #4	
Alternator		24V - 50A	
Starting motor		24V - 5.0kW	

D4DA-G

70kWe Grade for Generator Engine

General View of Engine

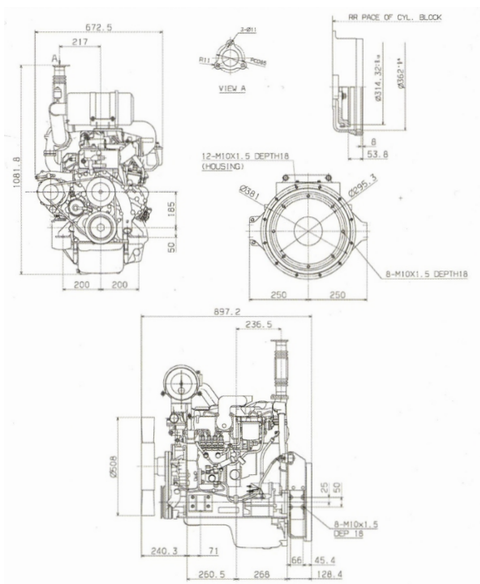

Specifications

Engine model		D4DA-G (EM2D)	
Engine type		4 Cycle, water cooled	
Injection type		Direct injection	
No. of cyl. And configuration		4-in line	
Aspiration		T.C	
Displacement(cc)		3,907	
Bore x stroke(mm)		104 x 115	
Compression ratio		16.5 : 1	
Dry weight(kg)		360	
Dimension	Length(mm)	897	
	Width(mm)	673	
	Height(mm)	1,082	
rpm		1,500	1,800
Stand-by power	Ps	85	107
	kW	62	79
Prime power	Ps	75	95
	kW	55	70
Governor		Electric	
Flywheel		SAE #10	
Flywheel housing		SAE #4	
Alternator		24V - 40A	
Starting motor		24V - 5.0kW	

D6AZ-G1, G2

200kWe, 170kWe Grade for Generator Engine

General View of Engine

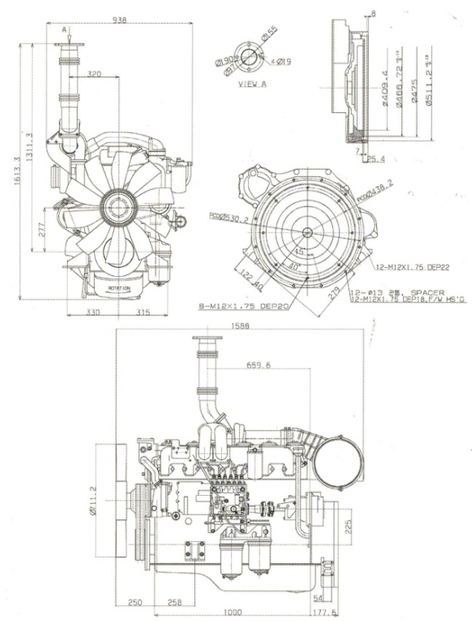

Specifications

Engine model		D6AZ-G1 (EH1X)		D6AZ-G2 (EH2X)	
Engine type		4 Cycle, water cooled			
Injection type		Direct injection			
No. of cyl. And configuration		6-in line			
Aspiration		T.C			
Displacement(cc)		11,149			
Bore x stroke(mm)		130 x 140			
Compression ratio		16.5 : 1			
Dry weight(kg)		1,010			
Dimension	Length(mm)	1,588			
	Width(mm)	938			
	Height(mm)	1,613			
rpm		1,500	1,800	1,500	1,800
Stand-by power	Ps	270	309	235	260
	kW	199	227	173	191
Prime power	Ps	243	278	212	234
	kW	179	204	156	172
Governor		Electric		Bosch RSV type	
Flywheel		SAE #14			
Flywheel housing		SAE #1			
Alternator		24V - 70A			
Starting motor		24V - 5.5kW			

D6AC-G

230kWe Grade for Generator Engine

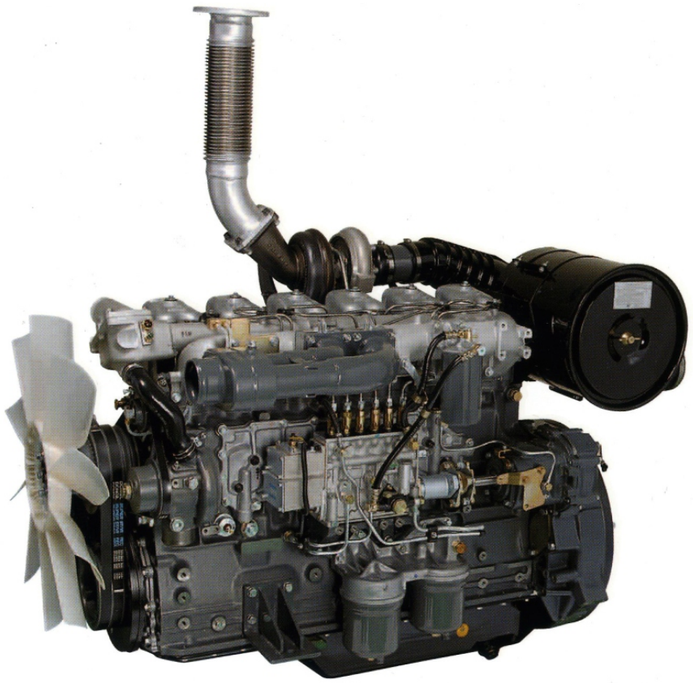

General View of Engine

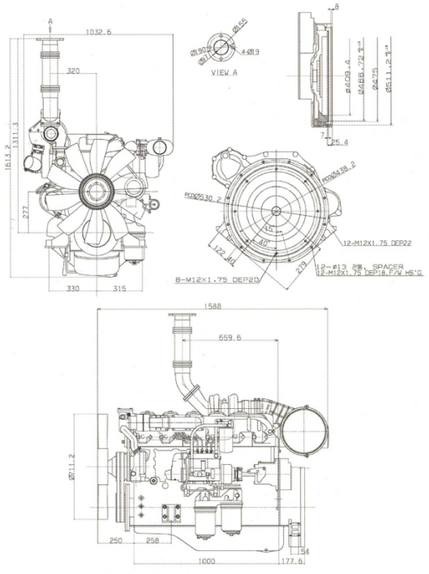

Specifications

Engine model		D6AC-G (BB17)	
Engine type		4 Cycle, water cooled	
Injection type		Direct injection	
No. of cyl. And configuration		6-in line	
Aspiration		T.C.I	
Displacement(cc)		11,149	
Bore x stroke(mm)		130 x 140	
Compression ratio		16.5 : 1	
Dry weight(kg)		1,050	
Dimension	Length(mm)	1,588	
	Width(mm)	1,033	
	Height(mm)	1,613	
rpm		1,500	1,800
Stand-by power	Ps	320	350
	kW	235	257
Prime power	Ps	288	315
	kW	219	232
Governor		Electric	
Flywheel		SAE #14	
Flywheel housing		SAE #1	
Alternator		24V - 70A	
Starting motor		24V - 5.5kW	

D6CC-G1, G2

350kWe, 300kWe Grade for Generator Engine

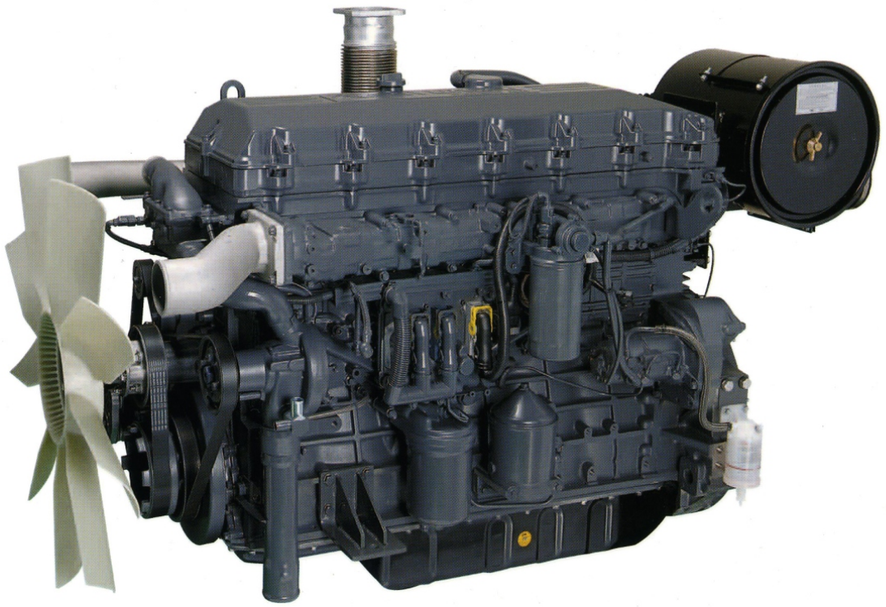

General View of Engine

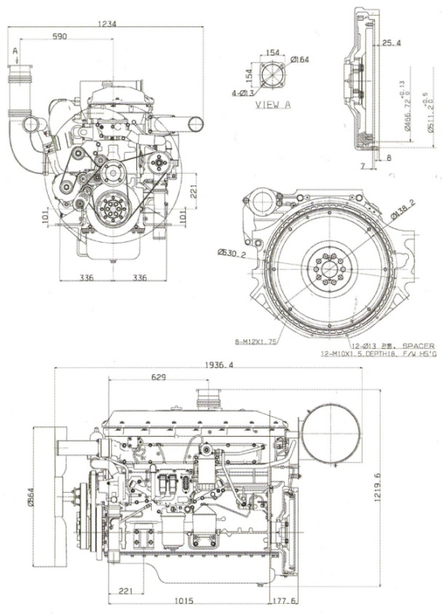

Specifications

Engine model		D6CC-G1 (EH9G)	D6CC-G2 (EH7G)
Engine type		4 Cycle, water cooled	
Injection type		Direct injection	
No. of cyl. And configuration		6-in line	
Aspiration		T.C.I	
Displacement(cc)		12,344	
Bore x stroke(mm)		130 x 155	
Compression ratio		17.2 : 1	
Dry weight(kg)		1,210	
Dimension	Length(mm)	1,936	
	Width(mm)	1,234	
	Height(mm)	1,219	
rpm		1,800	1,800
Stand-by power	Ps	530	460
	kW	390	338
Prime power	Ps	477	460
	kW	351	338
Governor		ECU	
Flywheel		SAE #14	
Flywheel housing		SAE #1	
Alternator		24V - 80A	
Starting motor		24V - 6.0kW	

GENERATOR ENGINE

ENGINE MODEL	D4BB-G1	D4BB-G2	D4AF-G	D4AK-G	D4DA-G
ENGINE CODE	AG31	AG39	EM68	EM69	EM2D

General

Fuel		Diesel	Diesel		
Injection type		indirect injection	Direct injection		
No. of cyl. And configuration		4-in line	4-in line		
Aspiration		N.A	N.A	T.C	T.C
Displacement(cc)		2,607	3,568	3,298	3,907
Bore x Stroke(mm)		91.1 x 100	104 x 105	100 x 105	104 x 105
Compression(kg)		22 : 1	17.5 : 1	16 : 1	16.5 : 1
Drg weight(kg)		210	324	334	360
Dimension(mm)	Length	883	901	901	897
	Width	631	678	656	673
	Height	806	1,021	1,071	1,082

Performance

rpm		1,800	1,800	1,500	1,800	1,500	1,800	1,500	1,800
Stand-by power	Ps	28	45	50	60	60	82	85	107
	kW	21	33	37	44	44	60	62	79
Prime power	Ps	25	41	45	54	54	74	75	95
	kW	19	30	33	40	40	54	55	70

Lubrication system

Oil capacity(ℓ)	5.4	8.5
Oil filter	Paper element(cartridge) type	Paper element(cartridge) type

Fuel system

Governor	-	Bosch RSV type	Electric
Fuel injection pump	Bosch VE type	Bosch PES4A type	
Fuel filter	Paper element type	Paper element type	

Standard equipment

Flywheel	SAE #10	SAE #10	
Flywheel housing	SAE #4	SAE #4	
Air cleaner	Cyclone filter paper type	Cyclone filter paper type	
Alternator	12V - 65A	24V - 50A	24V - 40A
Starting motor	12V - 2.2kW	24V - 5.0kW	24V - 5.0kW

Techincal data

Heat rejection(kcal/h)		13,598	22,450	23,700	30,400	49,700
Intake air flow rate (m^3 / min)		1.9	1.9	2.9	3.6	5.0
Exhaust gas flow rate (m^3 / min)		5.4	5.4	8.5	10.5	16.0
Cooling water capacity(ℓ)		3.9		8.3	8.3	8.3
rpm		1,800	1,800	1,800	1,800	1,800
Fuel consumption	g/ps.h	185.0	190.0	166.5	157.4	154.0

Application	Generator	Generator

• Power is only for engine without cooling fan.

ENGINE MODEL	D6AZ-G1	D6AZ-G2	D6AC-G	D6CC-G1	D6CC-G2
ENGINE CODE	EH1X	EH2X	BB17	EH9G	EH7G

General

Fuel		Diesel			Diesel
Injection type		Direct injection			Direct injection
No. of cyl. And configuration		6-in line			6-in line
Aspiration		T.C		T.C.I	T.C.I
Displacement(cc)		11,149			12,344
Bore x Stroke(mm)		130 x 140			130 x 155
Compression(kg)		16.5:1			17.2:1
Drg weight(kg)		1,010		1,050	1,210
Dimension(mm)	Length	1,588		1,588	1,936
	Width	938		1,033	1,234
	Height	1,613		1,613	1,219

Performance

rpm		1,500	1,800	1,500	1,800	1,500	1,800	1,800	1,800
Stand-by power	Ps	270	309	235	260	320	350	530	460
	kW	199	227	173	191	235	257	390	338
Prime power	Ps	243	278	212	234	288	315	477	460
	kW	179	204	156	172	219	232	351	338

Lubrication system

Oil capacity(ℓ)	24.0	28.0
Oil filter	Paper element type with by-pass filter	Paper element type with by-pass filter

Fuel system

Governor	Electric	Bosch RSV type	Electric	ECU
Fuel injection pump	Bosch PE6A type	Bosch PE6AD type	Bosch PE6P type	Electric unit injector
Fuel filter	Paper element type			Paper element type

Standard equipment

Flywheel	SAE #14	SAE #14
Flywheel housing	SAE #1	SAE #1
Air cleaner	Cyclone filter paper type	Cyclone filter paper type
Alternator	24V - 70A	24V - 80A
Starting motor	24V - 5.5kW	24V - 6.0kW

Techincal data

Heat rejection(kcal/h)		99,000	90,000	120,000	240,000	210,000
Intake air flow rate (m^3 / min)		14.0	14.0	17.2	29.5	24.2
Exhaust gas flow rate (m^3 / min)		41.5	38.4	50.4	62.5	52.1
Cooling water capacity(ℓ)		24.0			42.0	42.0
rpm		1,800	1,800	1,800	1,800	1,800
Fuel consumption	g/ps.h	162.5	154.0	152.6	149.0	148.0

Application	Generator	Generator

INDUSTRIAL ENGINE

D4BB-C1

INDUSTRIAL ENGINE

General View of Engine

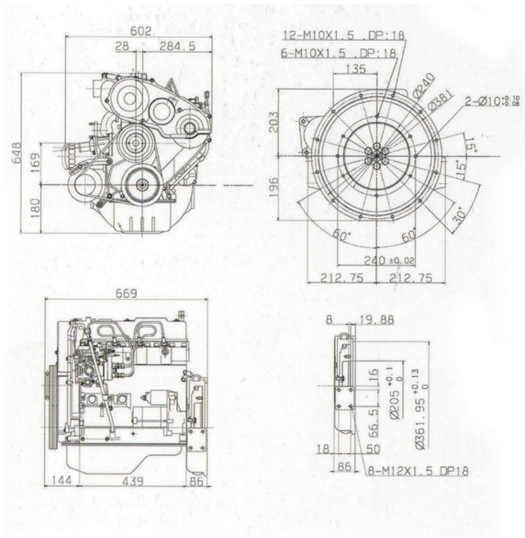

Specifications

Engine model		D4BB-C1 (AG90)
Engine type		4 Cycle, water cooled
Injection type		indirect injection
No. of cyl. And configuration		4-in line
Aspiration		N.A
Displacement(cc)		2,607
Bore x stroke(mm)		91.1 x 100
Compression ratio		22 : 1
Dry weight(kg)		200
Dimension	Length(mm)	669
	Width(mm)	602
	Height(mm)	648
Max power	ps/rpm	53 / 2,500
Max torque	kg.m/rpm	16.8 / 1,600
Governor		-
Alternator		12V - 65A
Starting motor		12V - 2.2kW
Certification		EC Stage-3A/China Tier-2
Application		Speed sprayer

D4BB-C4
INDUSTRIAL ENGINE

General View of Engine

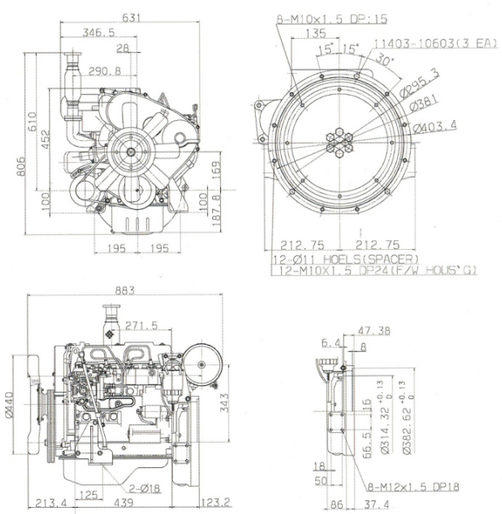

Specifications

Engine model		D4BB-C4 (AG35)
Engine type		4 Cycle, water cooled
Injection type		indirect injection
No. of cyl. And configuration		4-in line
Aspiration		N.A
Displacement(cc)		2,607
Bore x stroke(mm)		91.1 x 100
Compression ratio		22 : 1
Dry weight(kg)		200
Dimension	Length(mm)	883
	Width(mm)	631
	Height(mm)	806
Max power	ps/rpm	53 / 2,500
Max torque	kg.m/rpm	16.8 / 1,600
Governor		-
Alternator		12V - 65A
Starting motor		12V - 2.2kW
Certification		EC Stage-3A/China Tier-2
Application		Construction equipment Agricultural machinery

D4BB-C5
INDUSTRIAL ENGINE

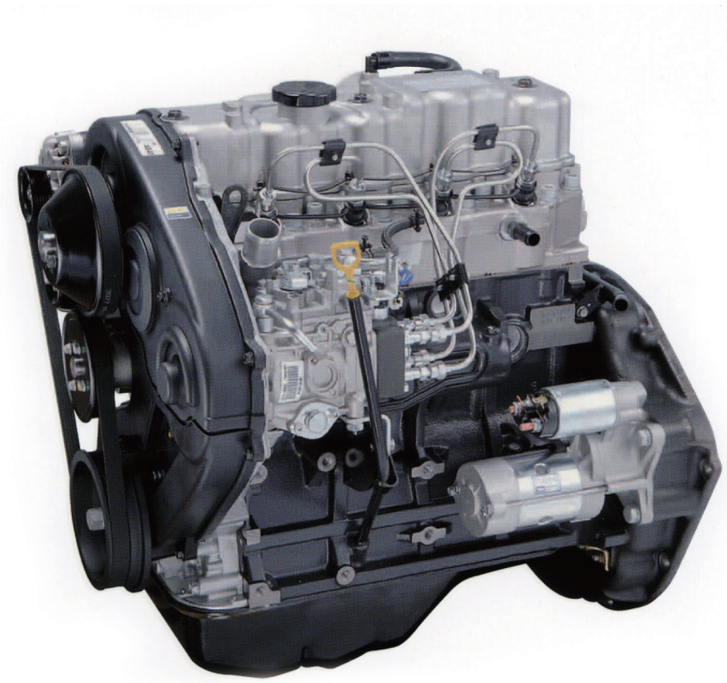

General View of Engine

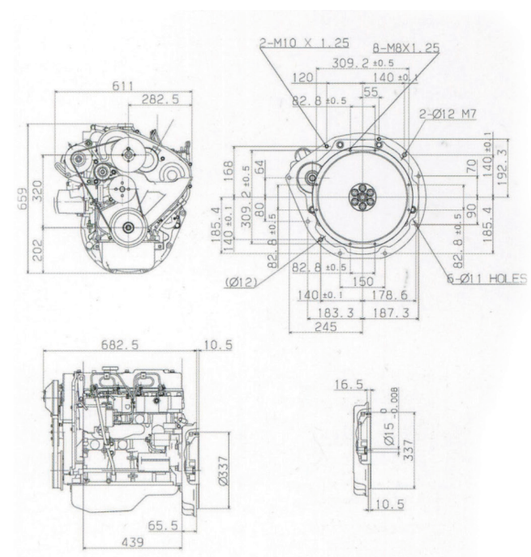

Specifications

Engine model		D4BB-C5 (AG43)
Engine type		4 Cycle, water cooled
Injection type		Indirect injection
No. of cyl. And configuration		4-in line
Aspiration		N.A
Displacement(cc)		2,607
Bore x stroke(mm)		91.1 x 100
Compression ratio		22 : 1
Dry weight(kg)		200
Dimension	Length(mm)	683
	Width(mm)	611
	Height(mm)	659
Max power	ps/rpm	53 / 2,500
Max torque	kg.m/rpm	16.8 / 1,600
Governor		-
Alternator		13.5V - 70A
Starting motor		12V - 2.2kW
Certification		EC Stage-3A/China Tier-2
Application		Forklift truck

D4BB-C8
INDUSTRIAL ENGINE

General View of Engine

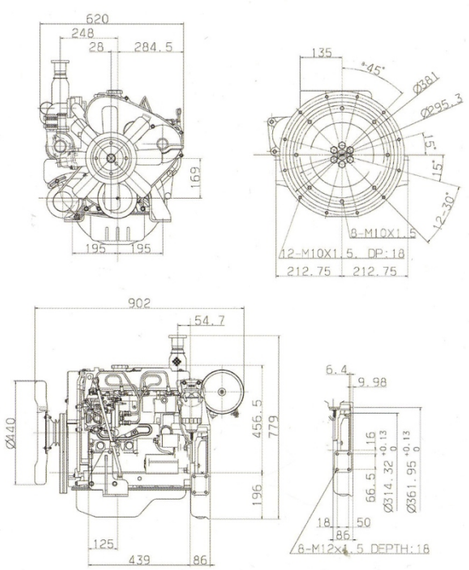

Specifications

Engine model		D4BB-C8 (AG50)
Engine type		4 Cycle, water cooled
Injection type		Indirect injection
No. of cyl. And configuration		4-in line
Aspiration		T.C
Displacement(cc)		2,607
Bore x stroke(mm)		91.1 x 100
Compression ratio		22 : 1
Dry weight(kg)		215
Dimension	Length(mm)	902
	Width(mm)	620
	Height(mm)	779
Max power	ps/rpm	64 / 2,500
Max torque	kg.m/rpm	19.9 / 2,000
Governor		-
Alternator		12V - 65A
Starting motor		12V - 2.2kW
Certification		-
Application		Construction equipment Agricultural machinery

D4BB-P1
INDUSTRIAL ENGINE

General View of Engine

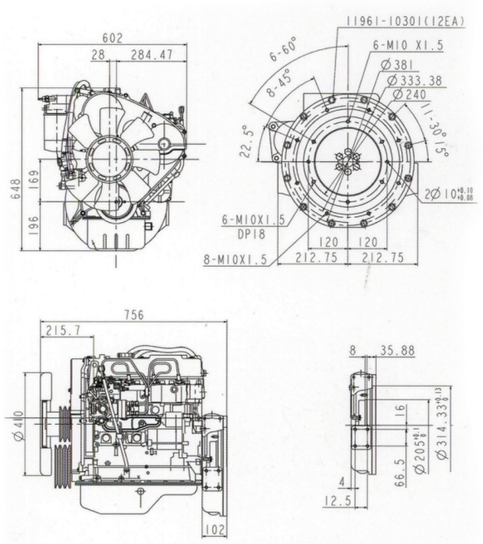

Specifications

Engine model		D4BB-P1 (AG32)
Engine type		4 Cycle, water cooled
Injection type		Indirect injection
No. of cyl. And configuration		4-in line
Aspiration		N.A
Displacement(cc)		2,607
Bore x stroke(mm)		91.1 x 100
Compression ratio		22 : 1
Dry weight(kg)		200
Dimension	Length(mm)	756
	Width(mm)	602
	Height(mm)	648
Max power	ps/rpm	40 / 2,000
Max torque	kg.m/rpm	15 / 1,500
Governor		-
Alternator		-
Starting motor		24V - 5.0kW
Certification		-
Application		Bus cooler

L4KB-C1
INDUSTRIAL ENGINE

General View of Engine

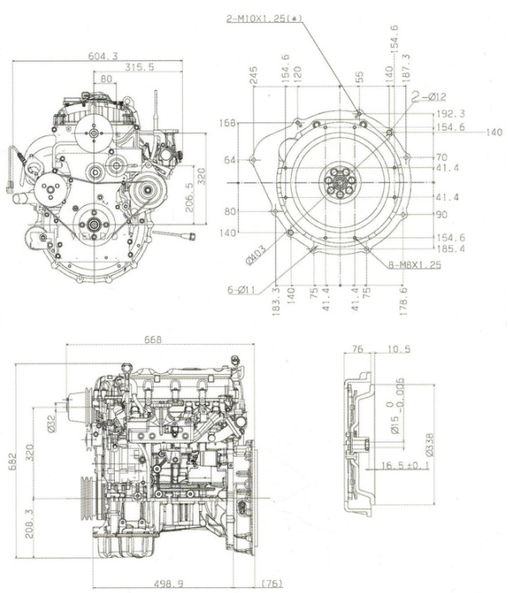

Specifications

Engine model		L4KB-C1 (CF11)
Engine type		4 Cycle, water cooled
Injection type		Indirect injection
No. of cyl. And configuration		4-in line
Aspiration		N.A
Displacement(cc)		2,359
Bore x stroke(mm)		88.0 x 97.0
Compression ratio		10.5 : 1
Dry weight(kg)		153
Dimension	Length(mm)	668
	Width(mm)	604
	Height(mm)	682
Max power	ps/rpm	65 / 2,500
Max torque	kg.m/rpm	18.5 / 1,600
Governor		-
Alternator		13.5V - 90A
Starting motor		12V - 1.4kW
Certification		EPA Tier-4
Application		Forklift truck

D4AK- P
INDUSTRIAL ENGINE

General View of Engine

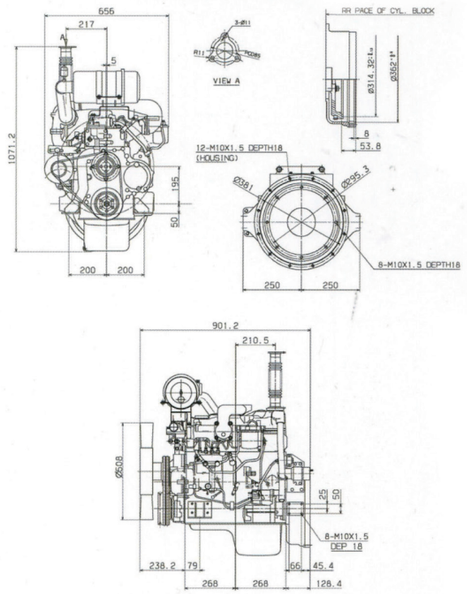

Specifications

Engine model		D4AK-P (EM2B)
Engine type		4 Cycle, water cooled
Injection type		Direct injection
No. of cyl. And configuration		4-in line
Aspiration		T.C
Displacement(cc)		3,298
Bore x stroke(mm)		100 x 105
Compression ratio		16 : 1
Dry weight(kg)		334
Dimension	Length(mm)	901
	Width(mm)	656
	Height(mm)	1,071
Max power	ps/rpm	85 / 2,400
Max torque	kg.m/rpm	25.5 / 1,800
Governor		Bosch RSV type
Alternator		24V - 50A
Starting motor		24V - 5.0kW
Certification		-
Application		Pump, General power use

D4DA-P
INDUSTRIAL ENGINE

General View of Engine

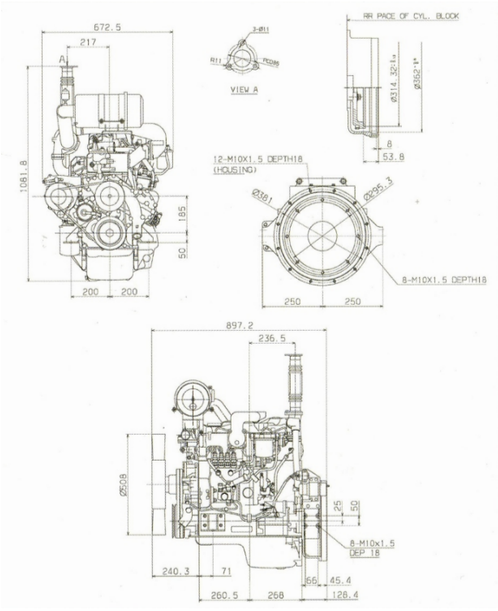

Specifications

Engine model		D4DA-P (EM1P)
Engine type		4 Cycle, water cooled
Injection type		Direct injection
No. of cyl. And configuration		4-in line
Aspiration		T.C
Displacement(cc)		3,907
Bore x stroke(mm)		104 x 115
Compression ratio		16.5 : 1
Dry weight(kg)		350
Dimension	Length(mm)	897
	Width(mm)	673
	Height(mm)	1,082
Max power	ps/rpm	100 / 2,000
Max torque	kg.m/rpm	37 / 1,700
Governor		Bosch RSV type
Alternator		24V - 40A
Starting motor		24V - 5.0kW
Certification		-
Application		Pump, General power use

D6AZ- P
INDUSTRIAL ENGINE

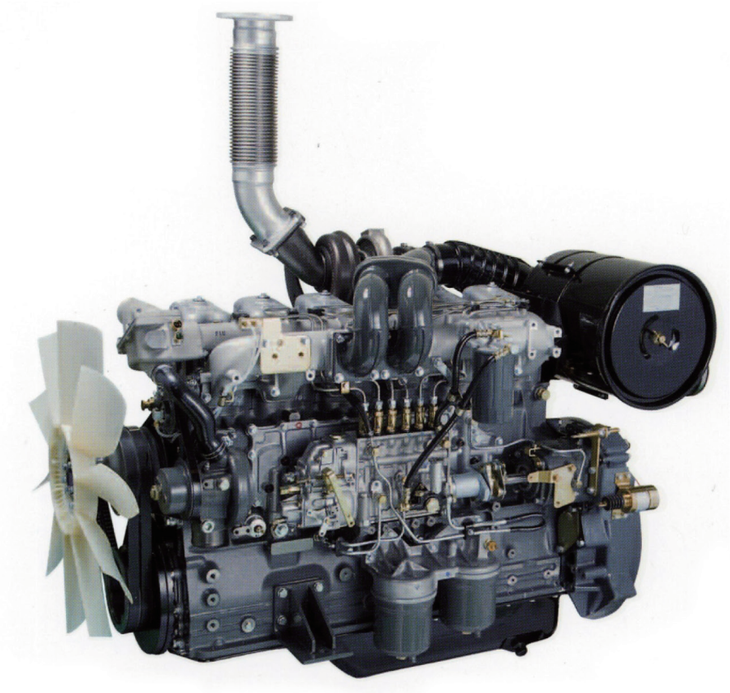

General View of Engine

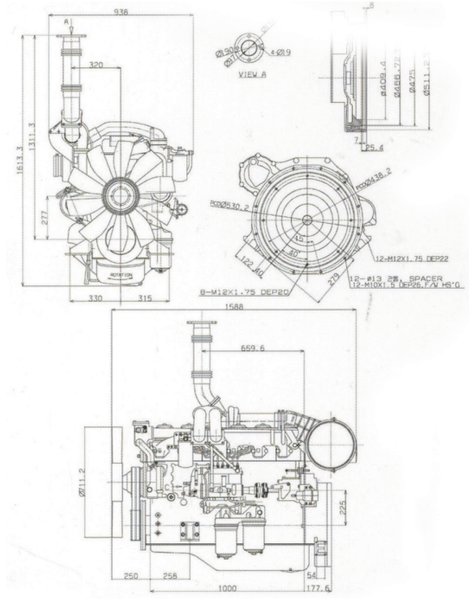

Specifications

Engine model		D6AZ-P (EH3P)
Engine type		4 Cycle, water cooled
Injection type		Direct injection
No. of cyl. And configuration		6-in line
Aspiration		T.C
Displacement(cc)		11,149
Bore x stroke(mm)		130 x 140
Compression ratio		16.5 : 1
Dry weight(kg)		1,010
Dimension	Length(mm)	1,588
	Width(mm)	938
	Height(mm)	1,613
Max power	ps/rpm	280 / 2,100
Max torque	kg.m/rpm	115 / 1,400
Governor		Bosch RSV type
Alternator		24V - 70A
Starting motor		24V - 5.5kW
Certification		-
Application		Pump, General power use

INDUSTRIAL ENGINE

ENGINE MODEL		D4BB-C1	D4BB-C4	D4BB-C8	D4BB-C5	D4BB-P1
ENGINE CODE		AG90	AG35	AG50	AG43	AG32
General						
Fuel		Diesel				
Injection type		Direct injection				
No. of cyl. And configuration		4-in line				
Aspiration		N.A		T.C	N.A	N.A
Displacement(cc)		2,607				
Bore x Stoke(mm)		91.1 x 100				
Compression ratio		22 : 1				
Dry weight(kg)		200	200	215	200	200
Dimension(mm)	Length	669	883	902	683	756
	Wigth	602	631	620	611	602
	Height	648	806	779	659	648
Performance						
Max power (ps/rpm)		53/2,500	53/2,500	64/2,500	53/2,500	40/2,000
Max torque (kg.m/rpm)		16.8/1,600	16.8/1,600	19.9/2,000	16.8/1,600	15/1,500
Specifications						
Cooling water capacity(ℓ)		3.9				
Oil capacity(ℓ)		5.4				
Governor		-				
Alternator		12V - 65A			13.5V - 70A	-
Starting motor		12V - 2.2Kw				24V - 5.0Kw
rpm		2,500	2,500	2,500	2,500	2,000
Fuel consumtion	g/ps.h	182.0	182.0	180.0	182.0	177.1
Certification		EC Stage-3A	EC Stage-3A	-	EC Stage-3A	-
		China Tier-2	China Tier-2	-	China Tier-2	-
Application		Speed sprayer	Construction equipment Agricuitural machnery		Forklift truck	Bus cooler

ENGINE MODEL		G4FC-F1	L4KB-C1	D4AK-P	D4DA-P	D4DD-C	D6GA-C	D4AZ-P	D6AC-C	D6CC-P
ENGINE CODE		NG97	CF11(FC11)	EM2B	EM1P	EM2G	PG46	EH3P	EH3N	EH5G
General										
Fuel		Gasoline	LPG	Diesel			Diesel	Diesel		Diesel
Injection type		Direct injection	Direct injection	Direct injection			Direct injection	Direct injection		Direct injection
No. of cyl. And configuration		4-in line	4-in line	4-in line			6-in line	6-in line		6-in line
Aspiration		N.A	N.A	T.C	T.C	T.C.I	T.C.I	T.C	T.C.I	T.C.I
Displacement(cc)		1,591	2,359	3,298	3,907	3,907	5,899	11,149		12,344
Bore x Stoke(mm)		77.0x85.44	88.0 x 97.0	100 x 105	104 x 115	104 x 115	103 x 118	130 x 140		130 x 155
Compression ratio		10.5 : 1	10.5 : 1	16 : 1	16.5 : 1	17.5 : 1	17 : 1	16.5 : 1		17.2 : 1
Dry weight(kg)		95	153	334	350	345	575	1,010	1,050	1,148
Dimension(mm)	Length	662	668	901	897	834	1,161	1,588	1,415	1,600
	Wigth	587	604	656	673	663	780	938	926	897
	Height	620	682	1,071	1,082	800	1,094	1,613	1,226	1,105
Performance										
Max power (ps/rpm)		55/2,800	65/2,500	85/2,400	100/2,000	100/2,300	180/2,200	280/2,100	280/1,900	440/2,000
Max torque (kg.m/rpm)		13.9/2,800	18.5/1,600	25.5/1,800	37/1,700	38/1,600	80/1,500	115/1,400	120/1,400	216/1,200
Specifications										
Cooling water capacity(ℓ)		3.0	2.5	8.3			11.1	22.0	22.0	42.0
Oil capacity(ℓ)		3.3	5.1	8.5			24.5	24.0	27.3	28.0
Governor		ETC	-	Bosch RSV type		ECU	ECU	Bosch RSV type		ECU
Alternator		13.5V - 90A	13.5V - 90A	24V - 50A	24V - 40A	24V - 50A	24V - 60A	24V - 70A		24V - 80A
Starting motor		12V - 0.9Kw	12V - 1.4Kw	24V - 5.0Kw		24V - 5.0Kw	24V - 5.5Kw	24V - 5.5Kw		24V - 6.0Kw
rpm		2,800	-	2,400	2,300	1,700	1,600	2,100	1,400	2,000
Fuel consumtion	g/ps.h	207.4	-	171.0	157.0	139.2	144.0	162.0	143.0	158
Certification		-	EPA Tier-4	-	-	EC Stage-3A	Korea Tier-3	-	-	-
		-	-	-	-	EPA Tier-3		-	-	-
Application		Speed sprayer	Forklift truck	Pump, General power use		Forklift truck	Forklift truck	Pump	Excavator	Transporter

BUSINESS

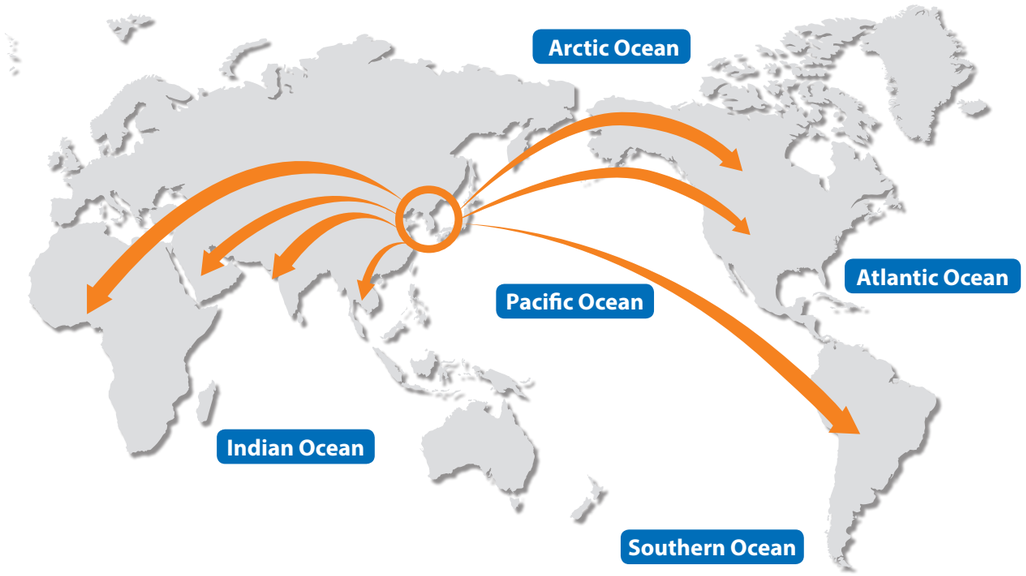

Handing Items

Marine diesel engines based on Hyundai engines	80 ~ 600 ps
Marine diesel gen-sets based on Hyundai engines	33 ~ 350kw
Marine diesel gen-sets based on Doosan engines	77 ~ 720kw
Industrial engines and Generator engines of Hyundai	
Industrial gen-sets for land use	